Reliability In Action

E660H

HYDRAULIC EXCAVATOR

Operating weight: 6050 kg

Bucket capacity: 0.23 m^3

Engine power: 36.2 kW

High-efficiency & energy saving

Reliable & durable

Comfortable & convenient

E660H

Main specifications

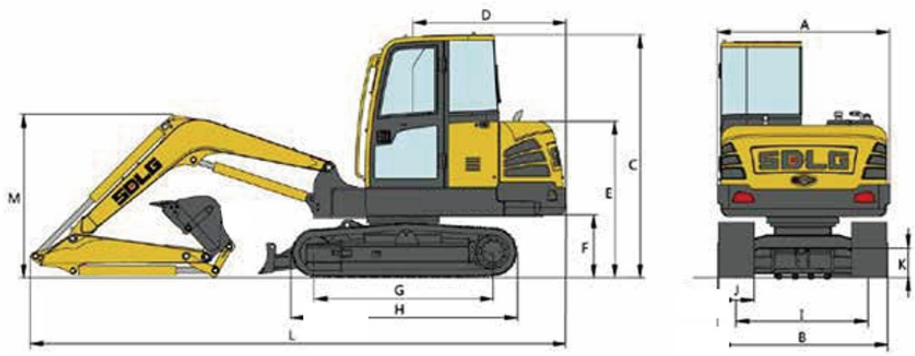

Overall specifications	Unit: mm
A Overall width of upper assembly	1870
B Overall width	1940
C Overall height of cab	-
D Tail swing radius	1670
E Overall height of engine hood	-
F Counterweight clearance	737
G Wheel base	1990
H Track length	2540
I Track gauge	1540
J Track width	400
K Min. ground clearance	375
L Overall length	5945
M Overall height of boom	-

Travelling section	
Number of carrier roller (one side)	1
Number of supporting wheel (one side)	5

Service capacity	
Fuel tank (L)	135
Hydraulic oil tank (L)	50
Engine oil (L)	12
Hydraulic system (L)	100
Cooling system (L)	10

Specifications	
Operating weight (kg)	6050
Bucket capacity (m^3)	0.23
Boom length (mm)	3030
Arm length (mm)	1540

Main performance	
Traveling speed (low/high) (km/h)	2.4/4.8
Slewing speed (r/min)	0 ~ 11.5
Average ground pressure (kPa)	34
Bucket Digging Force (ISO) (kN)	45

Overall range	Unit: mm
A Max. digging reach	6125
B Max. digging reach on ground	5975
C Max. digging depth	3760
D Max. digging depth (horizontal 2.5 m)	3325
E Max. vertical wall digging depth	2500
F Max. cutting height	5915
G Max. dumping height	4220
H Min. front swing radius	2260

Engine	
Engine Model	4TNV94L-ZCSC
Engine Type	In-line, water-cooled, four-stroke
Emission	GB 20891-2014(China IV)
Engine power (kW)	36.2
Rated engine speed (r/min)	2200
Maximum torque (N.m)/rotation speed (r/min)	209/1400
Displacement (ml)	3054

*SDLG reserves the right to change specifications and materials at any time without prior notification. Features of the machine in photos may include additional equipment.If you need more information and available options, please contact your local distributor or SDLG.

Shandong Lingong Construction Machinery Co., Ltd.

Add: Lingong Industry Park, Economic Development Zone, Linyi, Shandong, P.R.China

Tel: 0086-531-66590505 Fax: 0086-531-66590505 E-mail: export@sdlg.com