Reliability In Action

L948H
WHEEL LOADER

Operating weight: 14400 kg

Bucket capacity: 2.5 m^3

Engine power: 129 kW

Reliability | Energy-saving | Convenience | Comfort

L948H

Main specifications

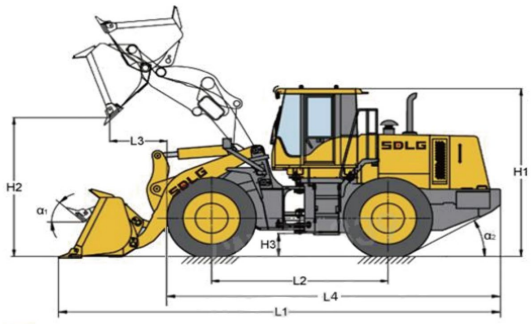

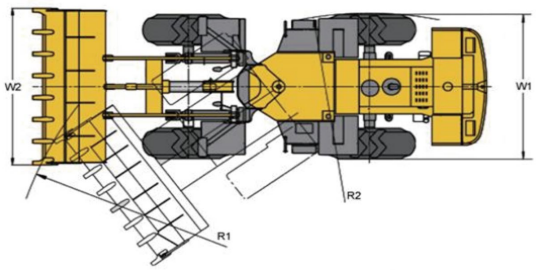

Overall parameter

Operating weight (kg)	14400
Rated load (kg)	4500
Bucket capacity (m³)	2.5(2.0 ~ 2.5)
Max. tractive force (kN)	110
Max. breakout force (kN)	≥125

Engine

Engine power (kW)	129
Rated speed (r/min)	2200
Emission standard	Stage V

Transmission system

Transmission type	Counter-shaft Electro-Hydraulic Shifting
Gears	Forward 4 & Reverse 4
Forward speed (km/h)	6.9/12.4/26/35
Reverse speed (km/h)	6.9/12.4/26/35

Hydraulic system of working device

Working device hydraulic system pressure (MPa)	22.7
Total cycle time (bucket lift & dump & fall) (s)	≤11.06

Steering system

Steering system pressure (Mpa)	19

Service capacities

Fuel (L)	200
Hydraulic oil (L)	128
Engine oil (L)	13
Transmission oil (L)	24.2
Axle (front/rear) (L)	26/26
Antifreeze coolant (L)	45

Overall dimension

Overall length L1 (mm)	7900
Outside width of wheel W1 (mm)	2574
Bucket width W2 (mm)	2762
Overall height H1 (mm)	3400
Wheel base L2 (mm)	3100
Minimum ground clearance H3 (mm)	440
Maximum unloading height H2 (mm)	2775
Corresponding unloading distance L3 (mm)	1255
Horizontal clearance radius R1 (outside of bucket)(mm)	6525
Minimum turning radius R2 (outside of rear wheel)(mm)	5675
Dumping angle	-45°
Steering angle	37°

STD Configuration

- Cummins B6.7
- SDLG VRTE205 Transmission
- SDLG Dry Axle
- Pilot Triple Ball Lever
- Standard Arm
- 3 Spool Valve
- Single Braking Pedal
- 20.5-25-16PRTL-TL612 (Environmental)
- ROPS Cab
- Air Conditioner
- LED Rotating Beacon
- Radio
- Reverse Buzzer
- Rearview Monitoring System
- GP bucket 2.5m³ (QC, wear plate, anti- falling)

Options

- Bucket 2.3m³ (wear plate and anti- falling)
- Enlarged Bucket 2.5m³
- Rock Bucket 2.0m³ / 2.5m³
- Tire20.5R25-2STTL-L-3
- Enlenghted Arm
- Without Quick Coupler (QC) Module
- Driving Stability Module
- Transmission Hydraulic Oil Module For Cold Environment
- Antifreeze Module For Cold Environment
- Tire Protect Chain 20.5-25 L3 40AF-214KG
- Tire Protect Chain 20.5-25 L3 40BF-232KG

*SDLG reserves the right to change specifications and materials at any time without prior notification. Features of the machine in photos may include additional equipment.If you need more information and available options, please contact your local distributor or SDLG.

Shandong Lingong Construction Machinery Co., Ltd.

Add: Lingong Industry Park, Economic Development Zone, Linyi, Shandong, P. R. China

Tel: + 86-531-66590505 Fax: + 86-531-66590505 E-mail: export@sdlg.com Website: www.sdlg.com