Reliability In Action

# L936H
## Wheel Loader

Operating weight: 11750 kg

Bucket capacity: 1.8 $m^3$

Engine power: 105 kW

High-efficiency | Reliability | Energy-saving | Comfort

# L936H

## Main specifications

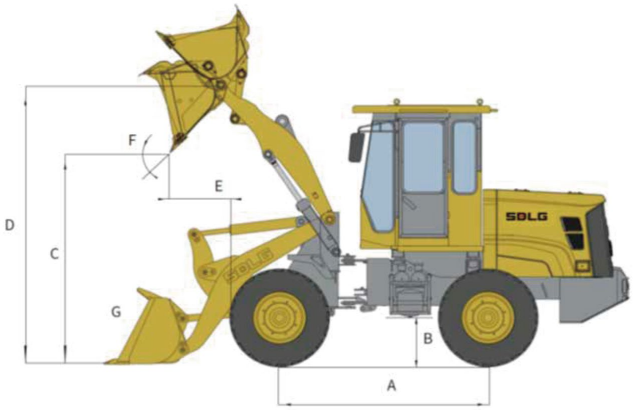


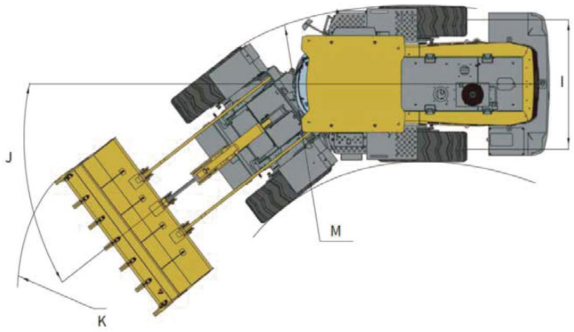


| Overall parameter | |
|---|---|
| Operating weight (kg) | 11350 |
| Rated load (kg) | 3500 |
| Bucket capacity (m³) | 2.1 |
| Max. tractive force (kN) | ≥100 |
| Max. breakout force (kN) | 100±3 |

| Engine | |
|---|---|
| Engine power(kW) | 99 |
| Rated speed(r/min) | 2200 |
| Emission standard | EU3B |

| Transmission system | |
|---|---|
| Transmission type | Planetary Power Shift |
| Gears | F2R1 |
| Forward speed (km/h) | 13/38 |
| Reverse speed (km/h) | 17 |

| Hydraulic system of working device | |
|---|---|
| Working device hydraulic system pressure(MPa) | 17.5 |
| Total cycle time (bucket lift & dump & fall)(s) | ≤9.0 |

| Steering system | |
|---|---|
| Steering system pressure (Mpa) | 14 |

| Service capacities | |
|---|---|
| Fuel (L) | 160 |
| Hydraulic oil (L) | 128 |
| Engine oil (L) | 12 |
| Transmission oil (L) | 44 |
| Axle (front/rear) (L) | 18+18 |
| Antifreeze coolant(L) | 33 |

| Overall dimension | |
|---|---|
| LxWxH (mm) | - |
| Wheel base(A) (mm) | 2850 |
| Min. ground clearance(B) (mm) | 370 |
| Max. dumping height(C) (mm) | 2930 |
| Maximum height of bucket hinge point (mm) | 3790 |
| Dumping distance(E) (mm) | 1140 |
| Dumping angle(F) | -45° |
| Steering angle(J) | 37° |
| Horizontal crossing radius(K) (mm) | 6065 mm |
| Min.turning radius(M) (mm) | 5250 mm |

| STD Configuration |
|---|
| Weichai WP4.6NG135E441 |
| SDLG TP170 |
| SDLG reinforced dry axle |
| Pilot control |
| STD Boom |
| 2-spool valve |
| Dual braking padel |
| Tire:17.5-25-12PR-L-3 |
| Normal cab |
| Air conditioner |
| Tachometer |
| Rotating beacon |
| STD bucket 2.1m³ |

| Options |
|---|
| STD bucket 1.6/1.8m³( W/W.O wear plates ) |
| STD bucket 2.18m³( With wear plates ) |
| Enlarged bucket 2.2/2.5m³ (Without wear plates) |
| Rock bucket 1.5m³ |
| QC Flat fork 1800×1780 |
| Cold Environment Module for Hydraulic Oil and Antifreeze |
| Wear-resistant Plate 2915 (3 Pieces, 16 Holes) |
| Rear-view monitor system |
| Tire:17.5-25-20PR-L-5 |
| Tire:17.5-25-12PR(Desert) |
| Tire:17.5R25-1STTL-L-3 |
| Tire:17.5-25-12PRTL-L-3 |
| Tire:17.5-25-16PR(Herringbone) |
| Tire:17.5-25-12PRTL(Anti - slip) |
| Tire:17.5-25-16PRTL-L-3 |
| Tire:17.5-25-20PR-L-3 |

* SDLG reserves the right to change specifications and materials at any time without prior notification. Features of the machine in photos may include additional equipment.If you need more information and available options, please contact your local distributor or SDLG.


**Shandong Lingong Construction Machinery Co., Ltd.**

Add: Lingong Industry Park, Economic Development Zone, Linyi, Shandong, P. R. China

Tel: + 86-531-66590505 Fax: + 86-531-66590505 E-mail: export@sdlg.com Website: www.sdlg.com